Borders Model Boat Club

Wiring Model Boats

This article is intended to explain the basics of wiring a radio controlled model boats. The first section discusses the components which may need to be installed, the second section addresses the question of what type of wire to use, the third section discusses the different types of connector, and the last section discusses installation requirements in different types of model.

Section 1 Components

Batteries

Two different batteries may be needed in a model boat:

Receiver Batteries

These will normally be Nickel Metal Hydride (NiMH) battery packs rated at 600mAHr capacity or greater, and usually nominally 4.8 volts. Some people recommend using 6 volt packs to obtain greater power from the servos, but this may lead to problems with other components. If you intend to use a 6volt pack, first check the voltage rating of all other components.
While batteries in a battery holder can be used, it is more reliable to use a ready made NiMH pack, as battery holders tend to corrode in the damp atmosphere inside a model boat.

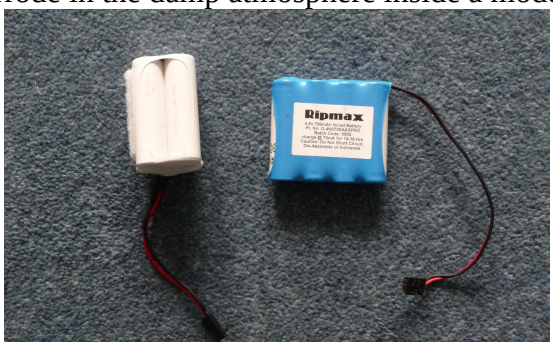

Power Batteries

These may be NiMH, Lead Acid, or Lithium Polymer (LiPo). It is not recommended to use LiPo batteries in a model boat because of the fire risk.
Lead Acid batteries are cheaper than NiMH, but are more bulky and heavier. If space and weight are a problem, use NiMH batteries.
The voltage rating is decided by that of the drive motors, and the capacity by how much current the motors draw, and how long a sailing session you envisage.
For lead acid batteries, 6volt and 12 volt sizes are commonly used.
For NiMH, 6, 7.2, 8.4, 9.6 and 12 volt sizes are used. The most common is 7.2 volts. Select the capacity by how much current the motors draw, and how long a sailing session you envisage.

To get an idea of battery sizes available, and their prices, visit www.componentshop.co.uk.
For more information about batteries see the article “About_Batteries.pdf” on the Club Web Site.

Servos

These are available in a number of different speeds and sizes. For a model boat, neither of these is usually an issue, so the cheapest standard size servo will usually fill the requirement. If the servo is acting as a sail winch, a high power type may be required.

Servos usually have a three wire ribbon lead. The most common colour code is black (0 volts), red (+5 volts), and white (signal), the red positive wire being the central one. Beware of older "Sanwa" servos which had the black negative line central.

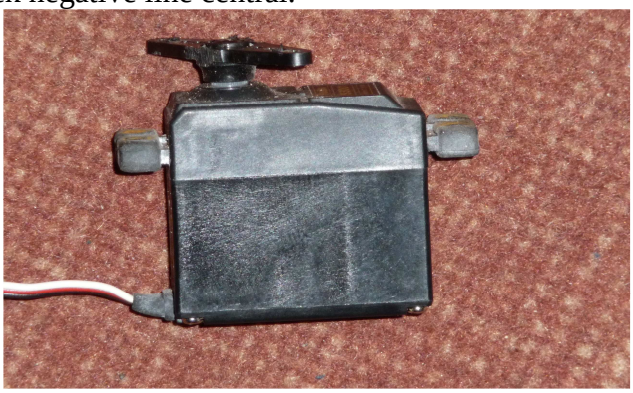

The kit for installing a servo consists of rubber grommets, brass bushes and flanged screws. The correct method of fitting these is shown in the diagram. Note that the bush is inserted from below.

To get an idea of the range of sizes and prices of servos which are available visit www.servoshop.co.uk.

Receiver

If you are using 2.4GHz equipment, the receiver must be compatible with the transmitter. Usually different makes will not be compatible.

A receiver will have a row of pins where you connect the power supply, servos, speed controllers, etc. These will be marked B for battery connection, or a numeral representing the channel number. The correspondence of a channel number and the transmitter control function is not standardised and will depend on the make of the transmitter.

Servo connectors are often polarised so that they will only fit one way round. Unfortunately, different manufacturers use different polarising system so you can not rely on this. Double check that you are plugging lead in the right way round.

Never shorten or modify the aerial leads. The length is critical as they are tuned to the transmitter frequency band. For 2.4GHz receivers with two antennae, these should be installed so that the

thinner active parts at the end are positioned at right angles to one another. Since the antennae are small, the receiver should be positioned so that reception is not masked by a metal object, such as the battery or motor.

For 27MHz or 40MHz sets, the positioning of the antenna affects the range of the receiver. Since with model boats we are not usually bothered with range considerations, some liberties can be taken with the installation as an optimum installation will give an "out of sight" range. Winding the antenna round a credit card sized piece of plastic will keep it neat, and it can then be placed as high as is convenient in the model. Always do a range check (with the transmitter aerial retracted) before the first voyage to check that it works. If the check gives you a range of better than 10 yards, it will be satisfactory on the pond with the transmitter aerial extended.

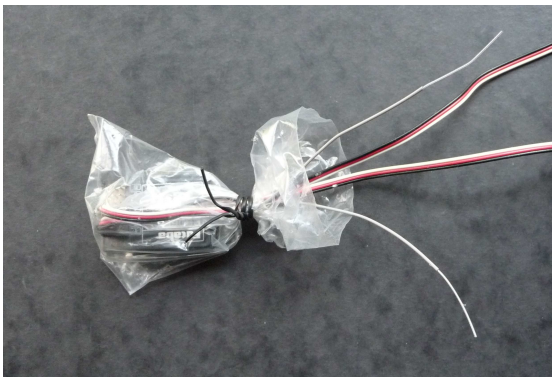

To keep the receiver dry, put it in a polythene bag, closing it with a twisted wire.

Switches

Manufacturers assign a "Current Rating" to their products and it is important that this is not exceeded, You can use a low rated switch for the receiver and servos, but use a higher rated switch for power. When selecting a switch remember that reliability is more important than cost, and that cheap switches invariably use low cost materials for the contacts and may be more prone to corrosion damage.

Receiver Switch

Radio manufacturers usually supply a switch rated at 1 Amp with transmitter / Receiver combos. This may have two or three leads attached. Three lead switches often have one red connector, and this is the one to plug into the Receiver. The "extra" lead is to enable you to recharge a receiver battery without unplugging everything. If you are using a speed controller with a BEC function you will not fit a receiver switch.

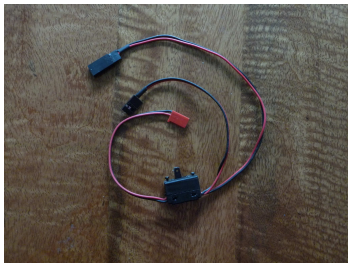

Power Switch

You will have to select a switch with a current rating high enough to carry the current for the electric motors when they are stalled. See the article "about_DC_motors.pdf" on the Club web site for information on how to estimate this. You can choose from toggle, push or rocker types. To see a range of switches visit www.rapidonline.com and search for the keyword 'switches'.

Fuses

It is a very good idea to fit a fuse in the power circuit of an electrically powered boat. This should be placed in the positive line as close to the battery as is convenient. (Remember you may have to replace the fuse some day.) Select a fuse rated at about 1.3 times the stall current of the motor

Fuses will not protect the electronic components, they will only protect the wiring, and probably prevent your model from catching fire.

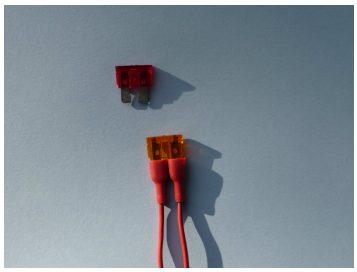

Blade fuses can be connected in-line using crimp receptacles.

Motor and Speed Controller

These topics are discussed in the document 'About_ Electric_Motors.pdf' available from the Club web site.

The Motor

The motor must be installed in the model so that it lines up with the propeller shaft, and ideally should be positioned as low as possible in the hull to give the model good static stability. It will need suppressors fitted to limit electro-magnetic interference on the receiver. As a minimum, a 0.1µF ceramic capacitor should be connected across the motor terminals. Motors sold in the UK will usually already have one fitted as it is an EU requirement.

If later on there is a radio interference problem, an additional ceramic capacitor should be fitted between each terminal and a convenient point on the motor casing. As a final solution to radio interference problems a ferrite core can be fitted to the motor leads.

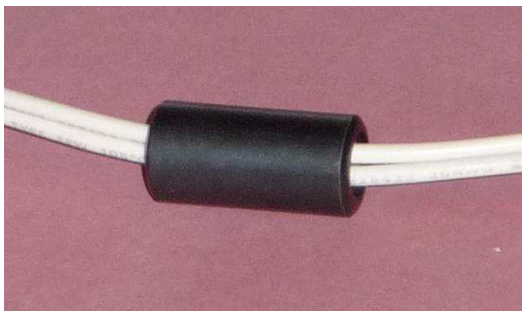

Speed Controller

The speed controller (ESC) must have a current rating which matches or exceeds the maximum current which the motor can draw (ie when it is stalled). In use it will get warm, and so should be mounted where air can circulate around it. (Do not pack it into a space surrounded by foam.) High current rated speed controllers may require water cooling. Position it as far as is convenient from the receiver to minimise any radio interference. (This should not be a problem with a well designed speed controller, but interference problems still can occur).

Most modern electronic speed controllers include a function known as BEC (Battery Elimination Circuit) which enables you to dispense with the receiver battery. The BEC circuit derives a 5 volt supply from the motor battery, and feeds the receiver via the 3 wire ribbon cable. Thus the motor power switch also controls the receiver. If the ESC has a BEC function, it is important that no receiver battery is plugged into the receiver. If your model uses two or more ESCs, then BEC must only be enabled on one of them.

Section 2 Wire Type

Wire Sizes

It is necessary to use wire which is capable of carrying the required current. This is a function of the cross section area of copper, the material used for insulation, and the amount of ventilation available. When an electrical current passes through a wire, it heats up, and this is what determines the wire size you must use.

Electric Motors and Pumps will draw the largest current, and the manufacturers data sheet will tell you what they will draw. Look for the value of the "stalled current". If only a "current under load" is quoted, use wires which will carry at least twice this value.

Wire manufactures quote a "Current Rating" for their products and you should be guided by this.
In models, it is advisable to use stranded wires rather than solid core for better reliability.

Terminating a stranded wire for Insertion in a Screwed Terminal Block

Stranded wires cause problems when inserted into screwed terminals. Do not solder the strands together as this causes a mechanical weakness. Either fit ferrules, or solder on a small piece of $2mm^2$ solid core wire, and fit a short piece of heat-shrink insulation.

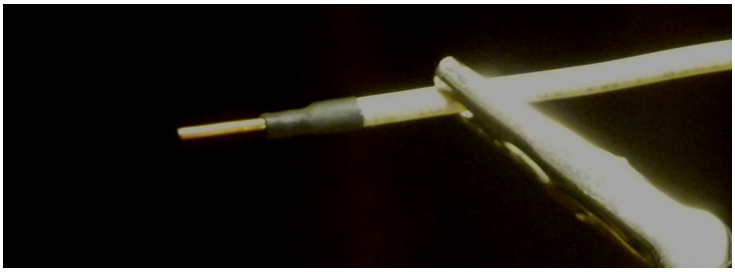

Black Wire Syndrome

This is a form of corrosion which is noted in radio controlled model wiring and appears mainly in wires with black insulation. The symptoms are that the copper wire appears greenish or black, and is impossible to solder. It has nothing to do with the colour of the insulation, the only reason that it appears in black coated wires is that the colour is used to denote negative polarity. The corrosion is electrolytic in nature, and is probably connected with free chloride radicals in PVC insulation. Anyway, when it happens, you must replace that section of the wiring to ensure reliable operation.

You will find that the syndrome occurs about three years after the model has been wired up, so plan ahead so that it will be an easy task to replace the wiring.

Remember that you only spend a few hours each year actually sailing your model, so you need it to be 100% reliable when you do so. Keep checking the plugs and wiring.

Extension Lead Types

Various standard servo extension wires are available in various lengths. The normal lead is obviously for use when the original lead is not long enough. The "Y" lead enables you to run more than one servo (or ESC) from one receiver outlet. The BEC Isolator is to enable the BEC function of an ESC to be disabled, by simply removing the red wire.

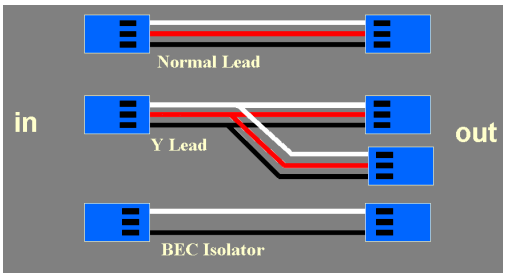

Section 3 Connectors

While the various electrical components could be "hard wired" together, it is better practice to use plug and socket connectors so that any part can be removed easily for cleaning, replacement or repair. It is important to make sure that the connectors you use are capable of passing the electrical current to the device.

Plug and socket pairs are connected to the circuit so that when unplugged, the supply side is shrouded to prevent accidental short circuits.

Servo Connectors

These are low current connectors. There appear to be three types of servo "Z" connectors in use at the present time. They all use similar crimped inserts, but there are small differences to the plastic housings. All three types will fit Futaba receivers.

Futaba Type

JR/Hitech Type

Other makes

The connectors and the three way ribbon cable can be purchased to make up your own leads, but be warned that you will need to have the correct crimp tool, and that it is quite difficult to acquire the knack of fitting the crimp connectors to the wires. You can ruin a number of expensive connectors while learning the skill. If you only want one or two it is much cheaper to buy the leads ready made up.

Power Connectors

These are capable of passing the higher current for the electric drive motors. There are three connectors in common use:

Tamiya Connector

Mini Tamiya Connector

Deans Connector

The Tamiya connectors may be soldered or crimped. They are polarised by having square or round shrouds on the male receptacle, which is the lower of the two in the picture. It is conventional to fit

the female receptacle, containing the pin connections to the supply side, with the positive lead being fitted to the square connection.

The leads are soldered to the Deans connectors, with heatshrink insulation supporting the joint.

Section 4 Installation

When deciding the layout of you installation, think about the balance of the boat. Locate heavy items, such as the batteries, as low down as possible, and in the middle of the boat. Remember that electrical things require servicing, and so keep everything accessible. Everything you put in may also have to be taken out some day. Use stainless steel bolts and screws as they are less likely to corrode.

Mount the receiver away from the drive motor and from any wires that carry high currents. Mount it as high as convenient to help keep it dry.

Try to route the wires so as to keep things as tidy as possible. When making joints, ensure that no part is left bare. Insulate joints with "Heatshrink" tubing or tape.

Velcro is very useful for holding items in place.

4.1 Model Yachts

A simple model yacht will need the following components:

Battery
Switch
Receiver (RX)
Rudder Servo
Sailwinch Servo

These should be connected as shown below:

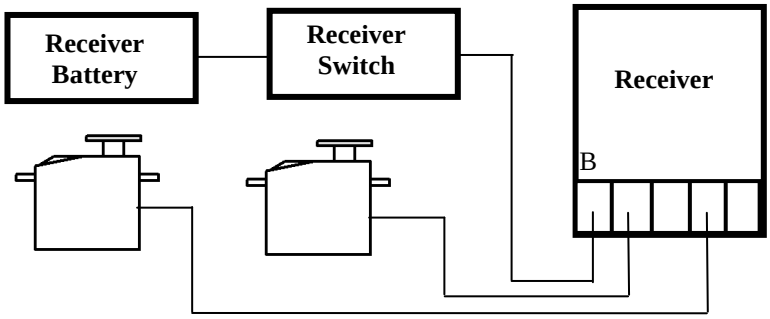

If the receiver does not have a socket labelled "B", the plug from the switch can be plugged into any spare socket on the receiver, or if all are being used, fit a "Y" lead to any channel to provide an extra socket.

The servos should be connected to the socket which corresponds to the appropriate control on the transmitter:

Rudder to the horizontal movement on the right hand stick
Sail winch to the vertical movement of the left hand stick.

4.2 Electrically powered boats

A simple electrically powered boat will need the following components:
Battery
Fuse
Switch
Receiver (RX)
Speed Controller (ESC)
Rudder Servo

A very important component in an electrically powered boat is the speed controller (also known as the ESC). This not only controls the speed of the motor, but nowadays also supplies the power to the receiver and steering servo, thus eliminating the need for a separate receiver battery. For the ESC to do this it must incorporate a "Battery Elimination Circuit", known as BEC. Most current speed controller designs have this feature, but if they do not, a receiver battery (or separate BEC unit) will be required.

If you have an ESC with BEC, the circuit will become:

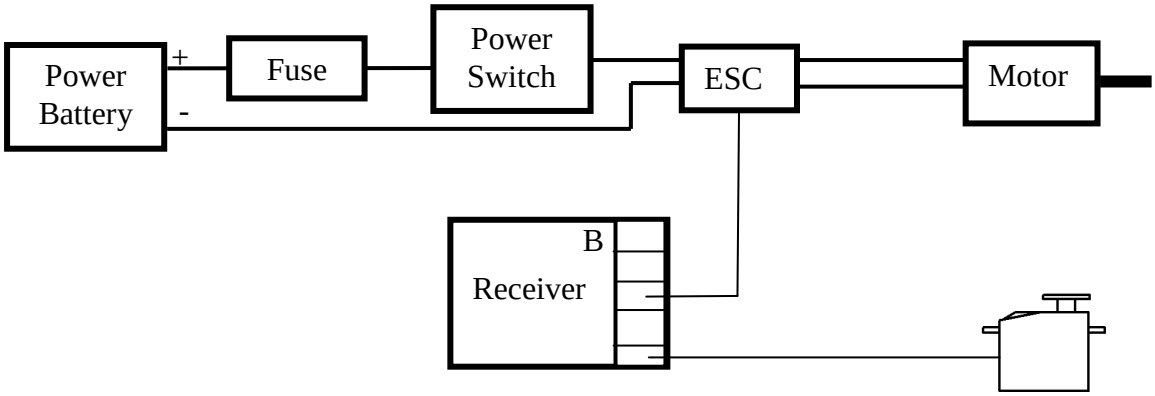

The connections between the receiver and the ESC, and between the receiver and the servo will be the leads with which they are supplied. The other wires should be heavier gauge stranded wires rated for the current that the motor will draw under load.
The fuse should be rated at about 1.3 times the motor stall current.
The switch can be a "Single Pole Single Throw" type (SPST) and must be rated for the maximum current that the motor is likely to draw.
For further information see the article "about DC_Motors.pdf" on the Club web site, or refer to the instructions supplied with your ESC.

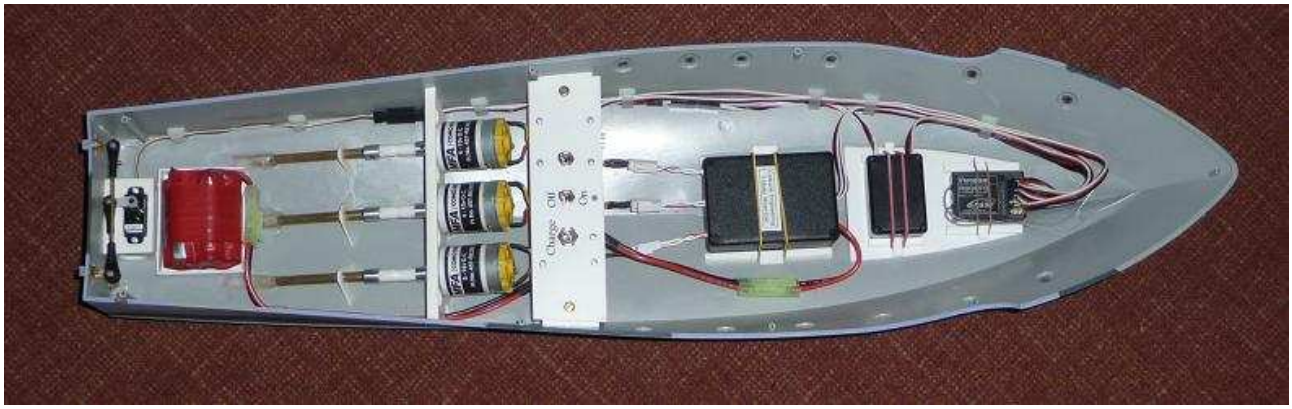

The picture above shows equipment installation in a model of a Vosper MTB. The switches and socket on the cross panel locate under an access hatch on the deck.

Adding a Charging Socket

It certainly makes life easier if you fit a charging socket so that the battery can be charged in situa. The wiring diagram is then modified as:

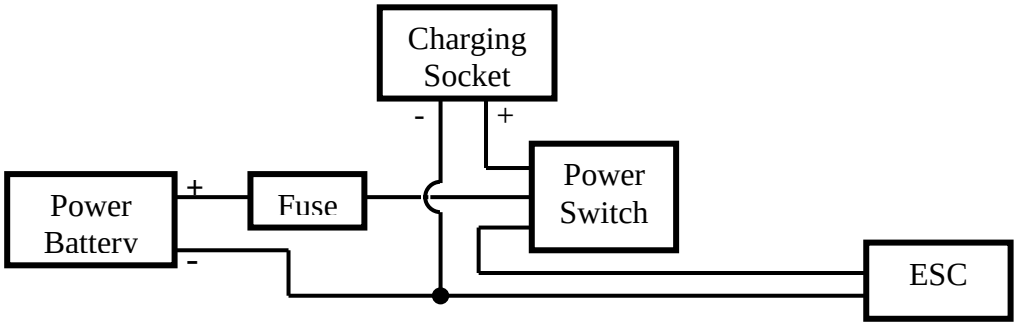

The type of switch required is “Single Pole Double Throw” (SPDT) which has three terminals. The battery should be connected to the “Common” terminal, the ESC to the “Normally Off” terminal and the charging socket to the “Normally On” terminal.

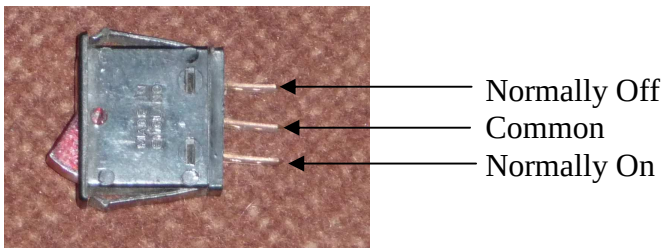

Installations with twin speed Controllers

If you are using two speed controllers, the BEC function must be disabled in one of the units.

What is Heatshrink?

Heatshrink sleeving is thin walled plastic tubing which has been prestretched to 2 or 3 times its original diameter. When it is heated it tries to shrink back to its original size. If a short length of sleeving is shrunk over a wired joint, it provides both insulation and support. It is also useful for holding battery packs together.

The sleeving is supplied in a range of sizes from 2mm diameter to over 100mm diameter and in a range of colours, although black and clear are the most common.

It can be shrunk using a hot air gun, by being held over a candle flame, or by holding a soldering iron close to it.